Lecture 6

Stable Diffusion

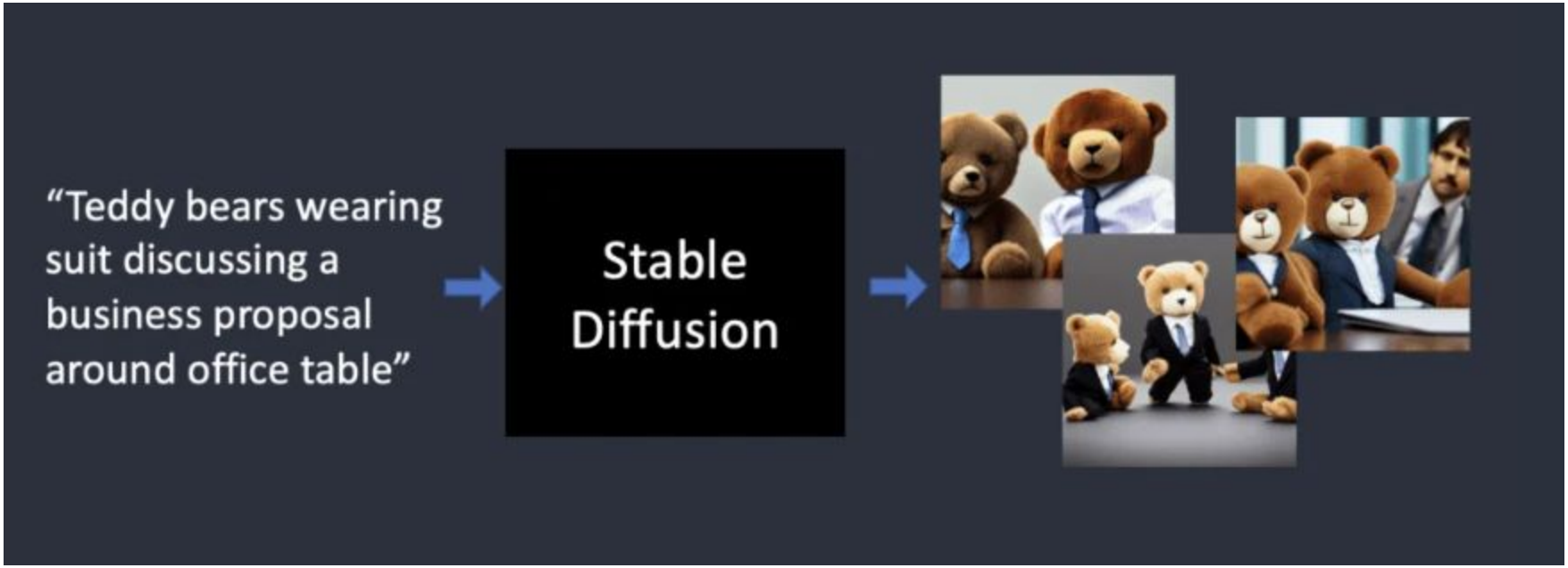

Forward Diffusion

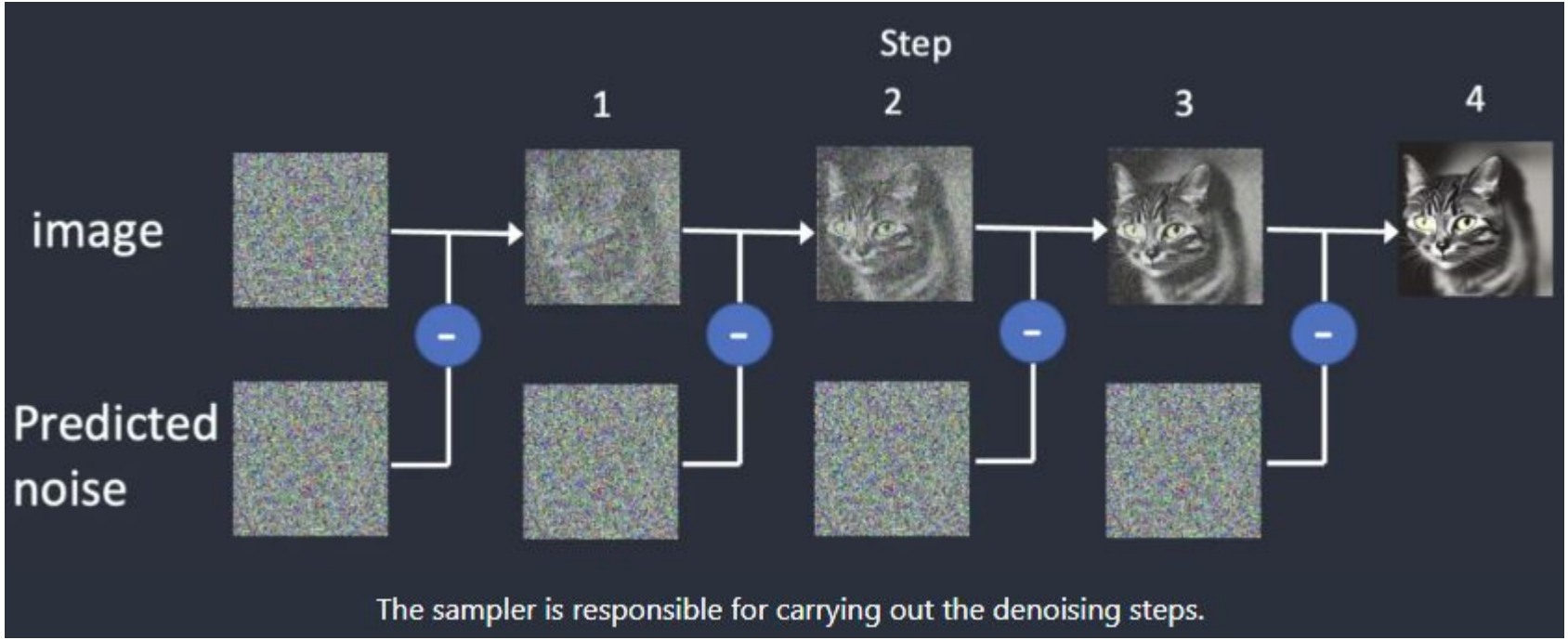

Forward Diffusion

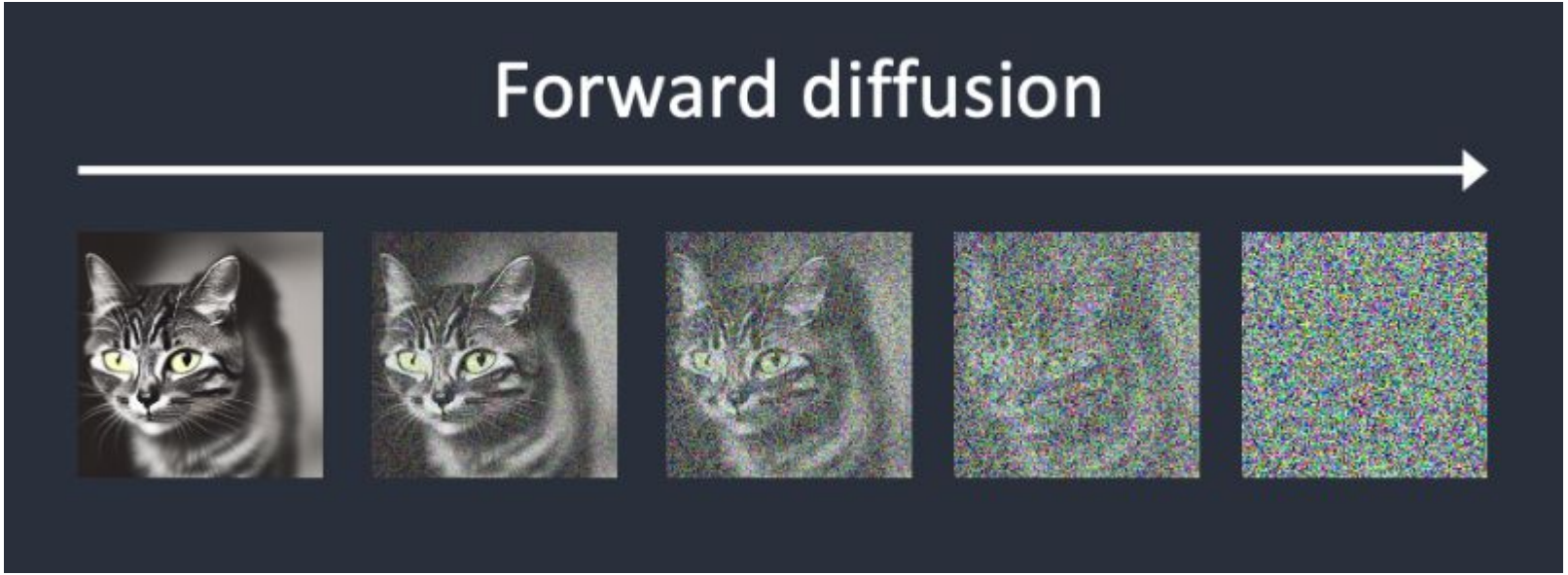

Reverse Diffusion

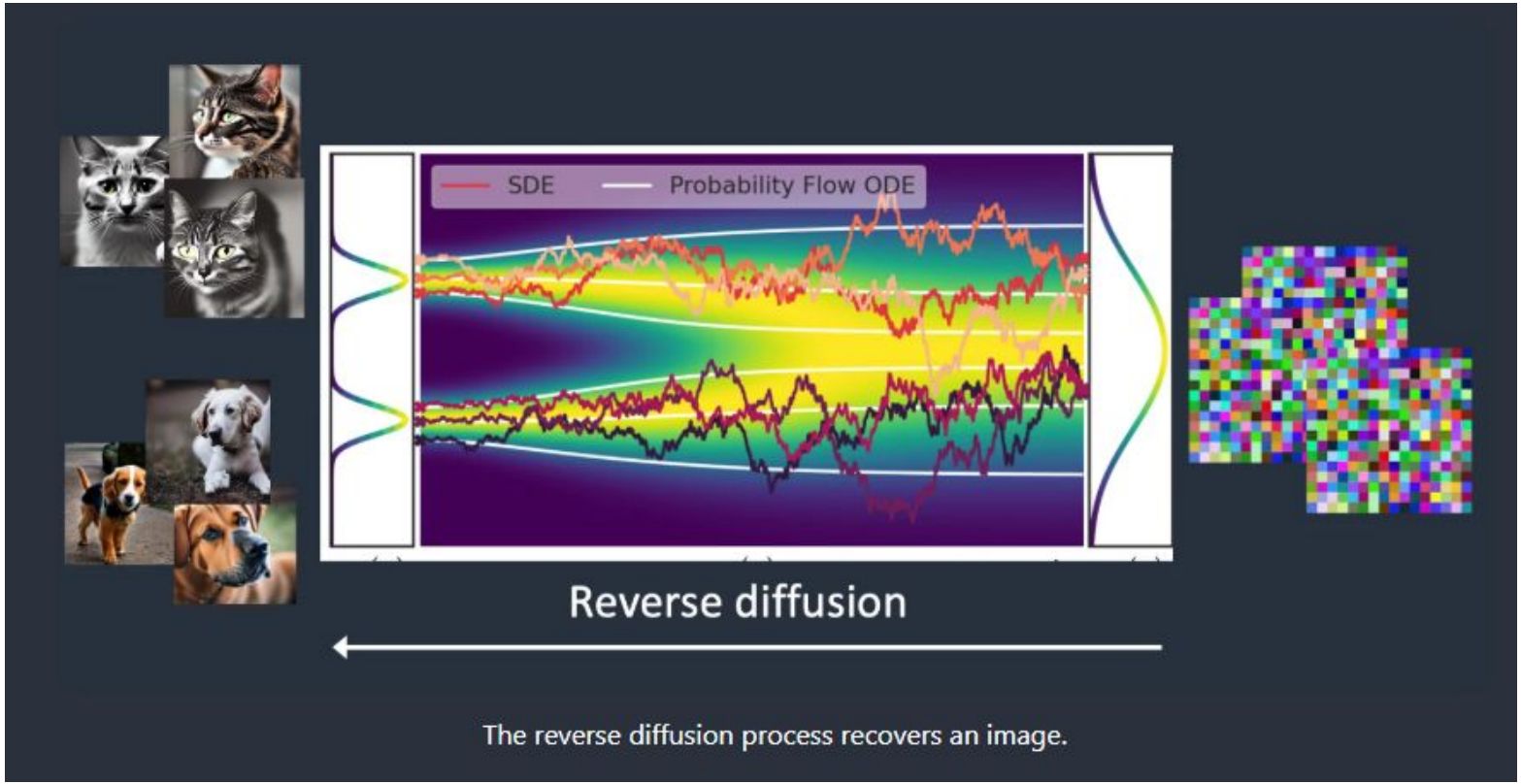

How training is done ?

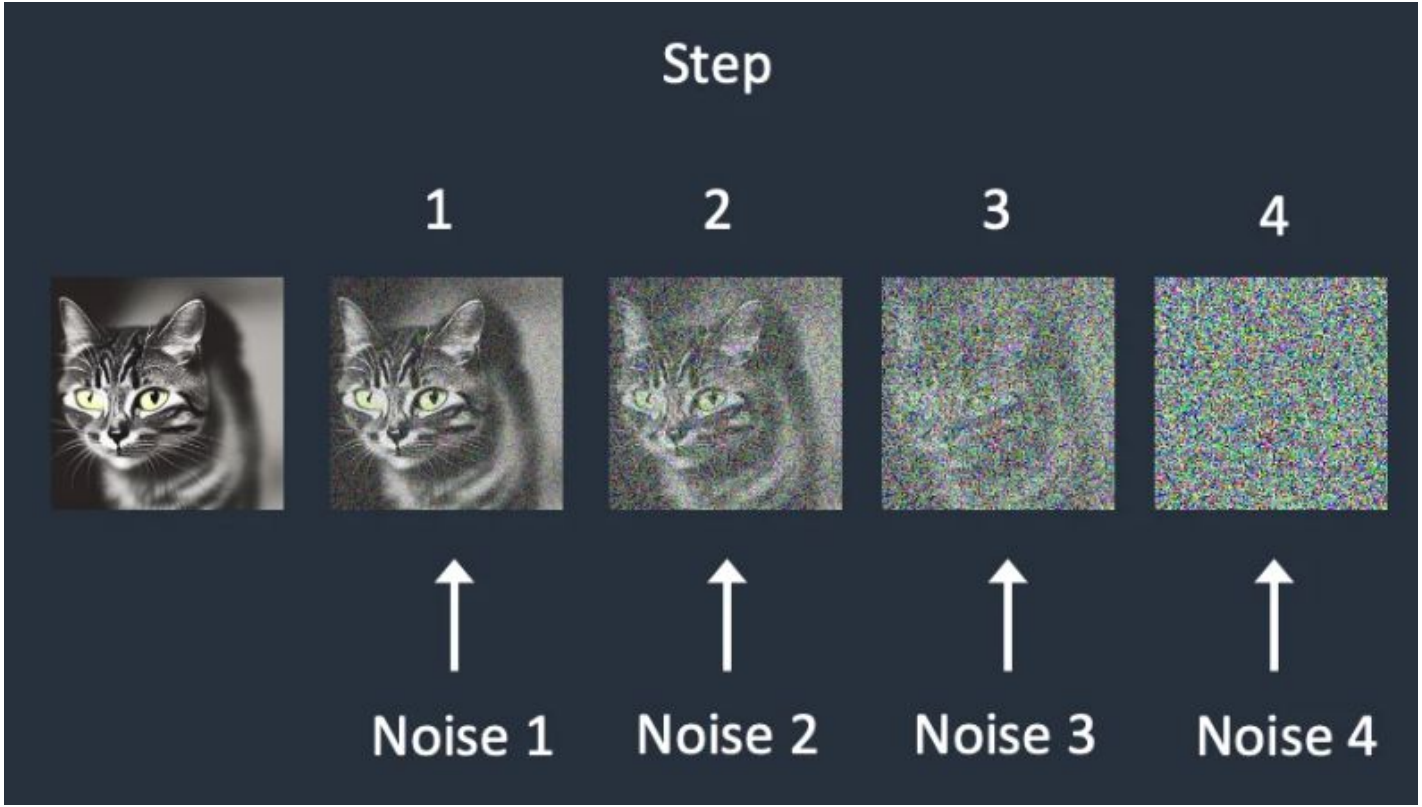

Reverse Diffusion

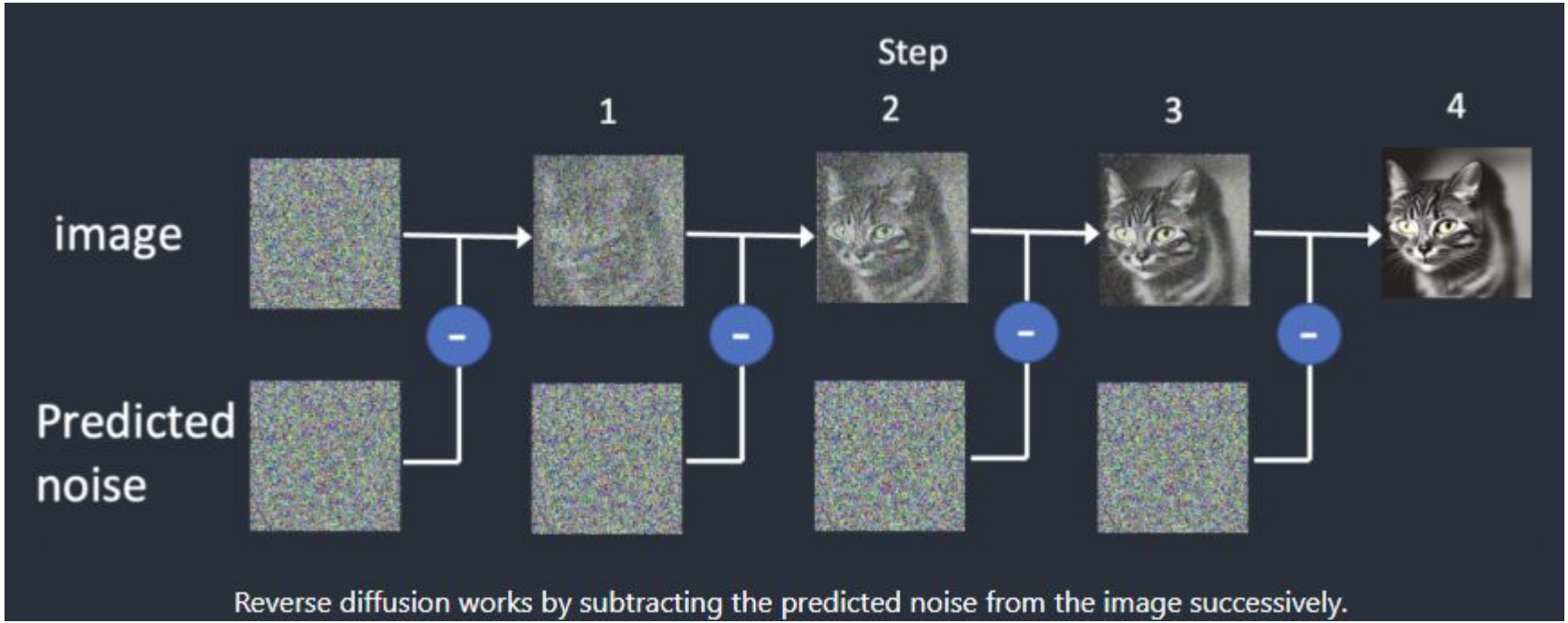

Latent Diffusion Model

- Compresses the image to latent space
- Latent space is 48 times smaller

Variational Autoencoder

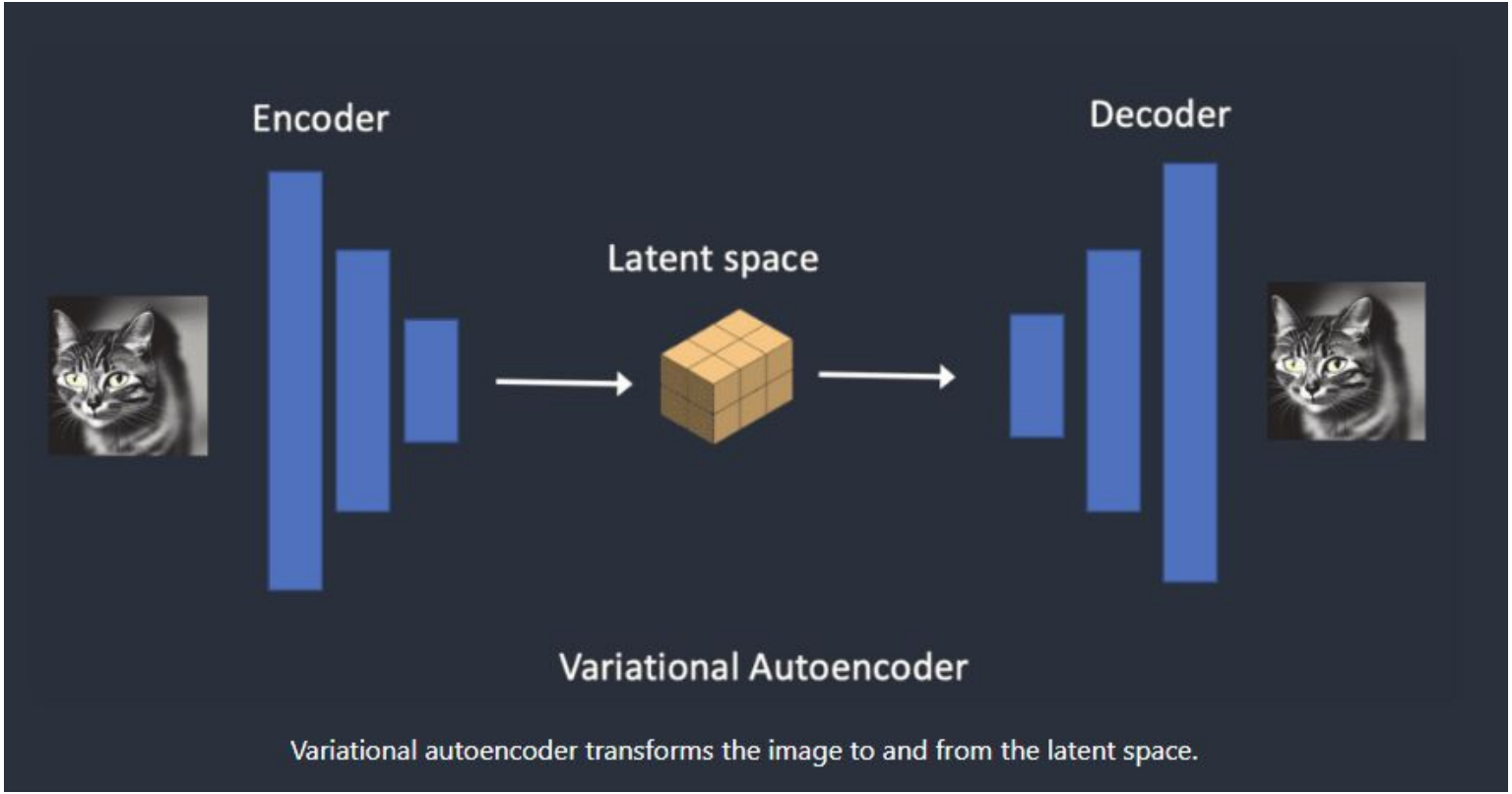

Why is LATENT space possible ?

REGULARITY

Conditioning

Where does the text prompt enter ?

Text prompt

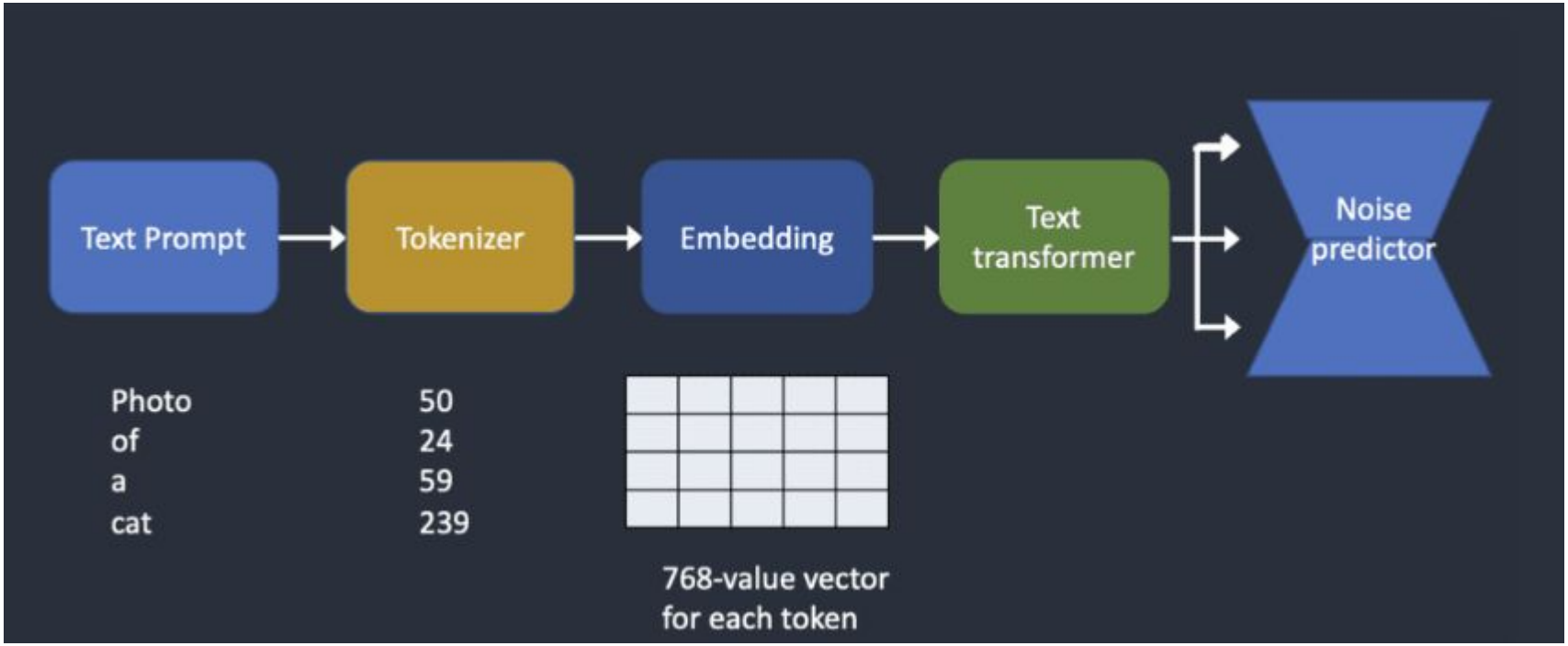
Text Prompt
Tokenizer
Embedding
Text transformer
Noise predictor
Photo
of
a
cat
50
24
59
239
768-value vector
for each token

Latent Diffusion Models

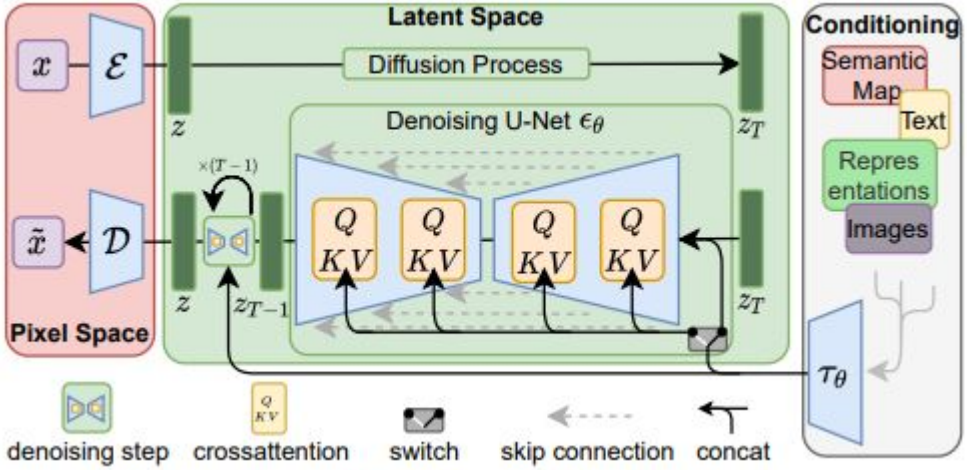

What every part does ?

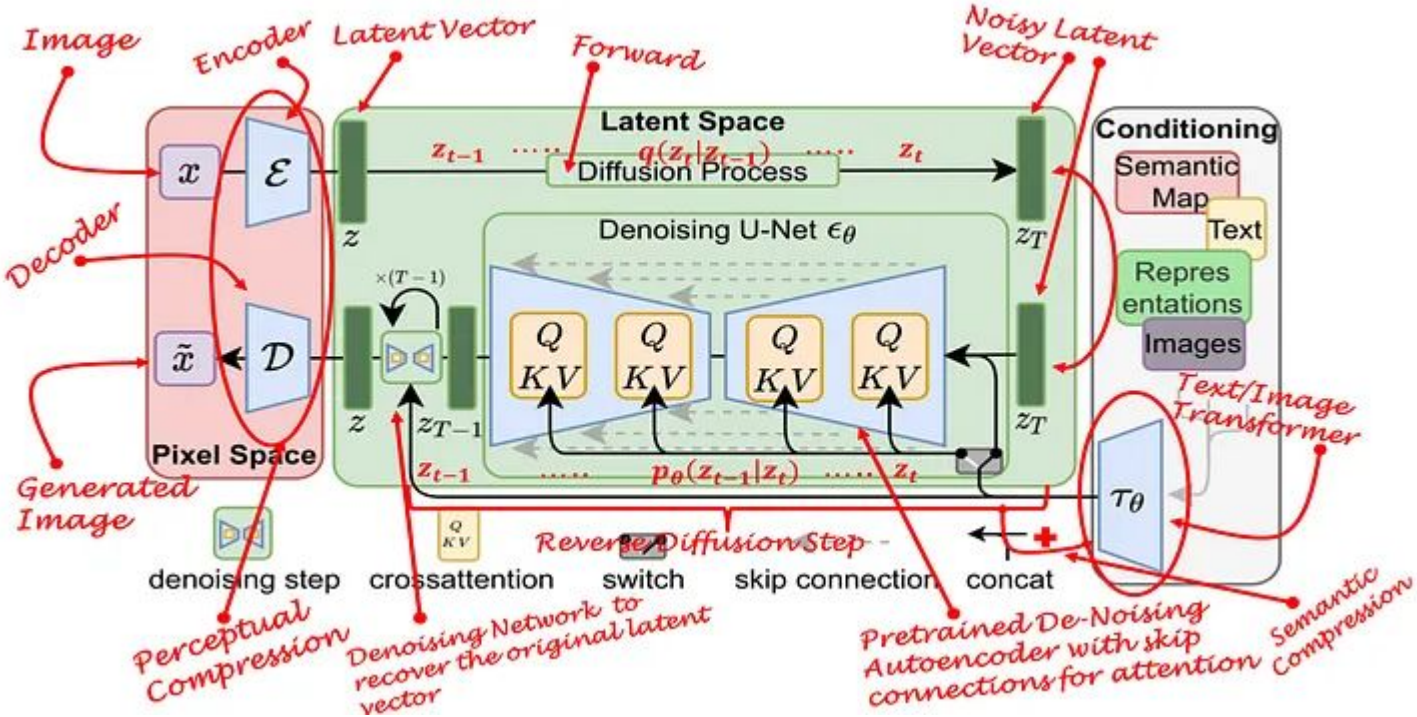

Results

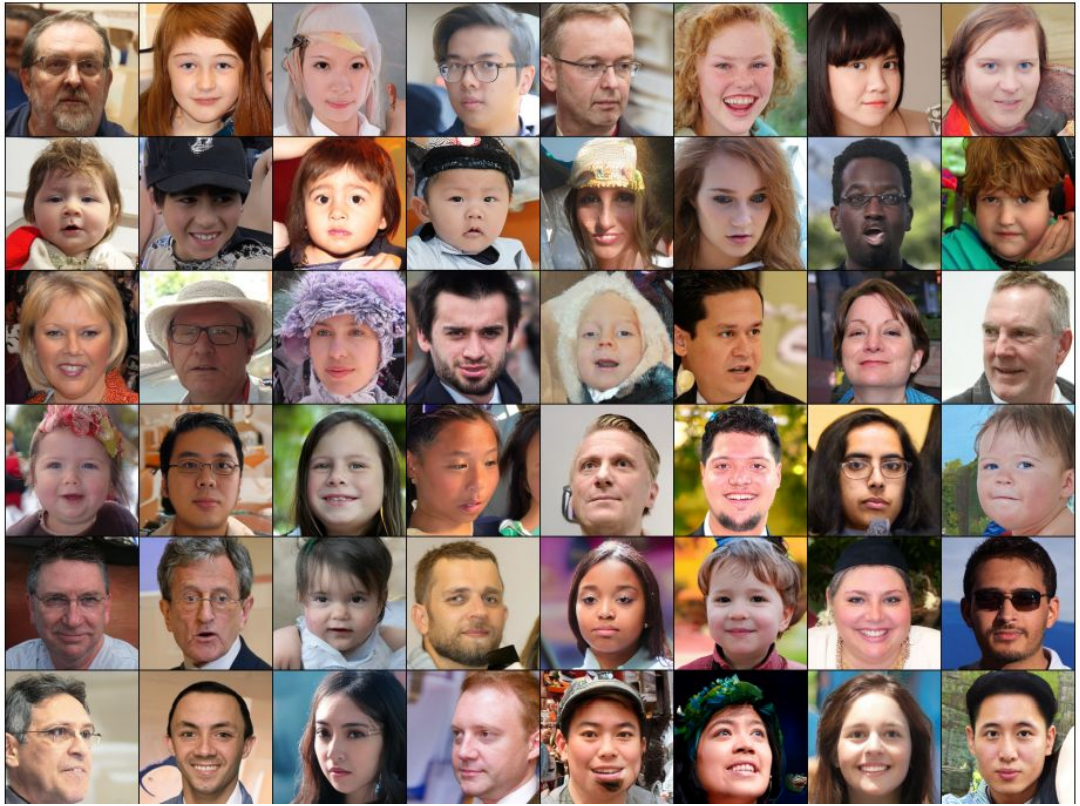

Results

Refs

https://arxiv.org/pdf/2112.10752

https://stable-diffusion-art.com/how-stable-diffusion-work/

Code to try out

https://colab.research.google.com/github/QUT-GenAI-Lab/genai-explained/blob/main/notebooks/1401%20Introduction%20to%20Latent%20Diffusion%20Models.ipynb